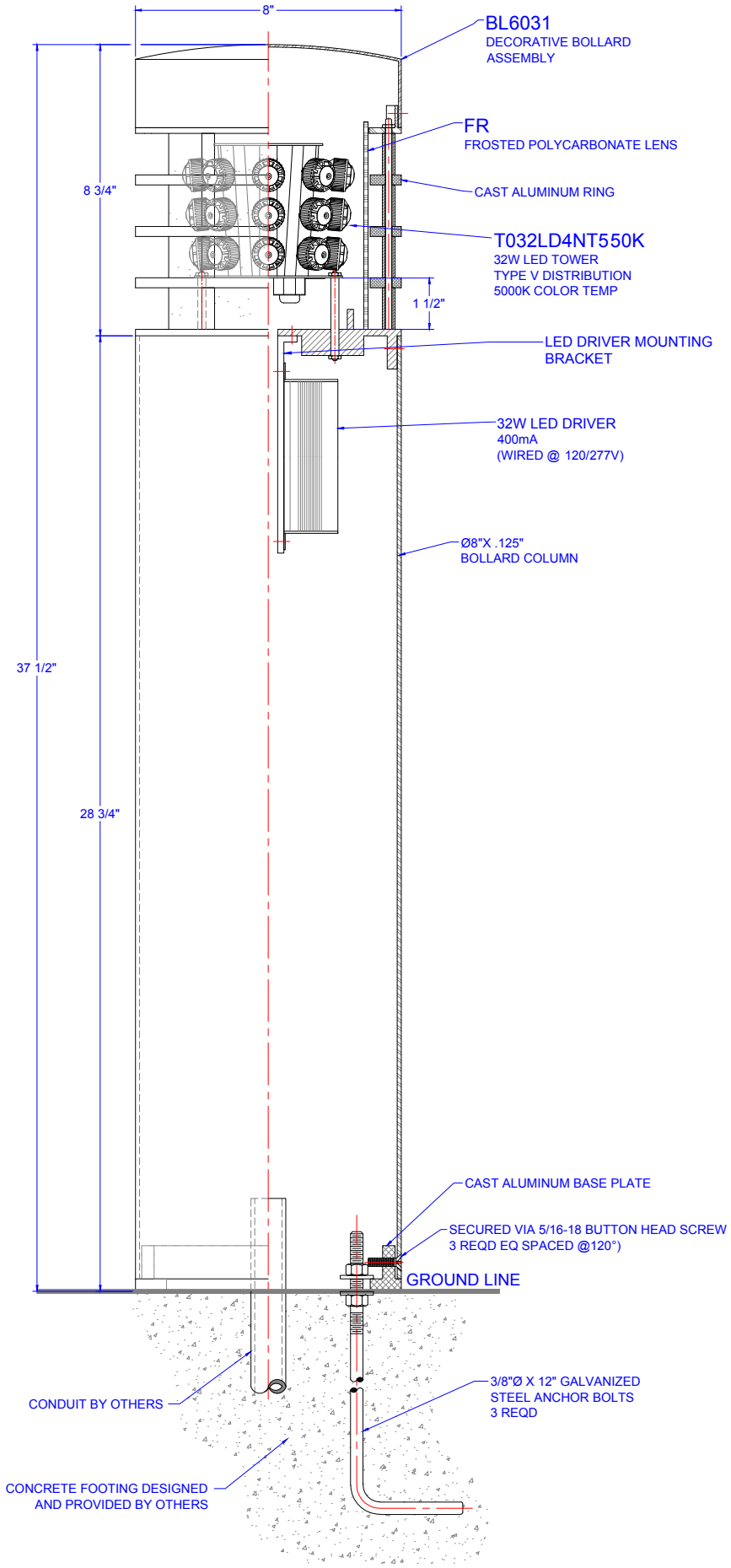

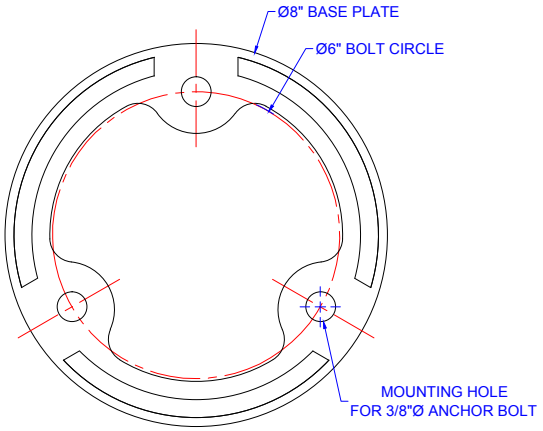

MOUNTING DETAIL

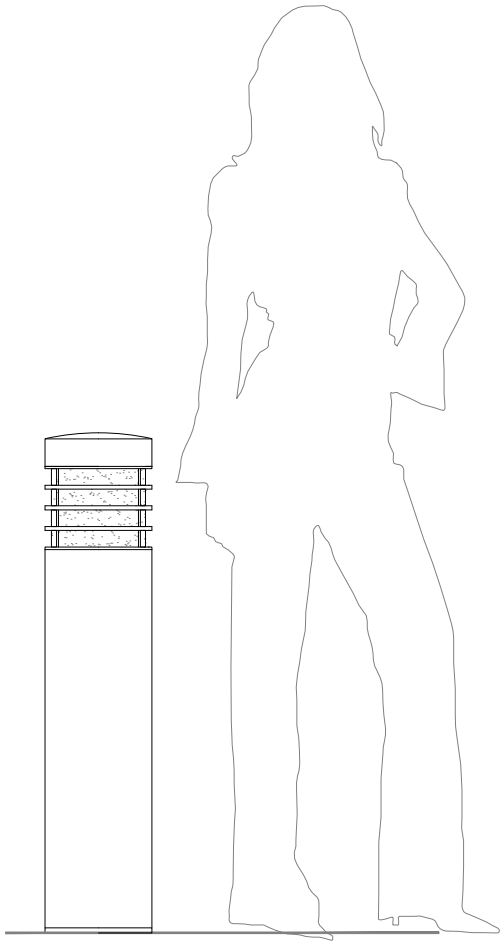

PROPORTIONAL VIEW