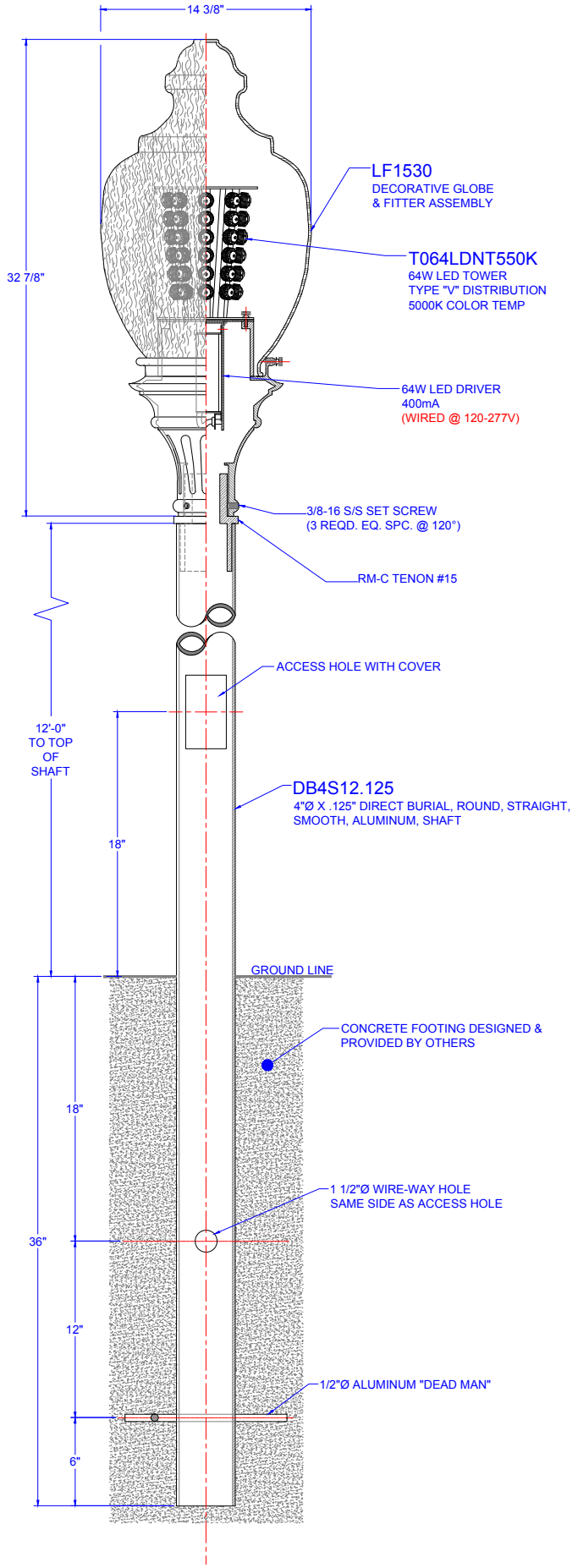

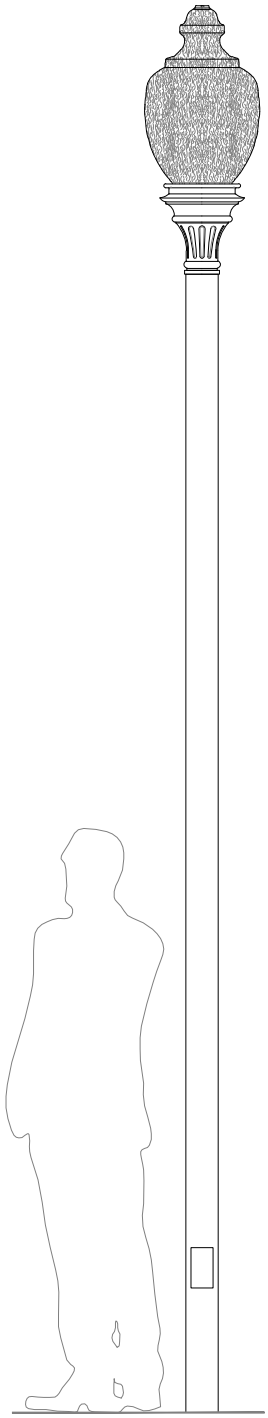

PROPORTIONAL VIEW